Australian Journal of Basic and Applied Sciences, 7(10): 484-489, 2013
ISSN 1991-8178

Effect Of The Clumping Chuck Structure On Size Extension Clamping Possibilities

Ibrahem Farhan Salman Al-Refo, Y.N. Kuznetsov, Zh.A. Hamuyela Gerra

University, of Department, Faculty, Box.3030. City. Country

Abstract: Influence of structure clamping chuck on extension size possibility of clamping is described. The tendencies of clamping characteristics of structures and constructions and further the examples of realization in new constructions of wide-range and quickset clamping chucks are exposed here.

Key wrods:

INTRODUCTION

Satisfaction of the variety of requirements to clamping mechanisms leads to a number of different structures, schemes and designs, among which there are optimal to appropriate quality criteria.

The process of optimal design of any clamping mechanism is a multivariate, multilevel, multi-criteria analysis and synthesis issue, the solution of which is associated with the choise of best option (Kuznetsov, Y.N., *et al*., 2010; Kuznetsov, Y.N., *et al*., 2011; Kuznetsov, Y.N., *et al*., 2012).

level I – synthesis and selection of active principle (method);

level II – synthesis and selection of mechanisms structures and schemes;

level III – synthesis and selection of mechanisms construction and its elements;

level IV – synthesis of optimal or rational parameters of mechanism construction and its individual components.

Exposition And Theoretical Analysis:

Next, we will consider the implementation of the four common powerful (energetic) flows with the CE diameter range scheme changing, providing that the clamping elements (Cl.E) in the CE non-removable (fig.1), and for the transfer to a different range, you must have the sets of plug-in CEl with different ways of connection to the CE.

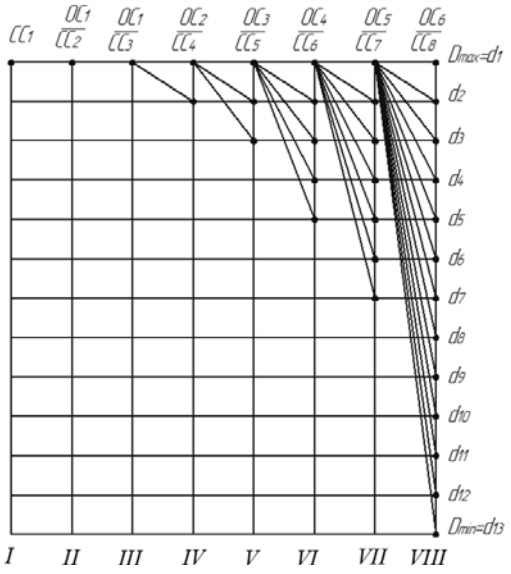

Fig. 1: Schemes coverage range of object sizes fixing (OC) non-replaceable clamping elements chucks (CE) of different structures

In Fig.1 there are shown 8 cover schemes of different CE (CE1 ... CE2) with the increasing range of clamping diameters: $\Delta d = D_{max} - D_{min}$:

I – CE, for OC1 – of one diameter of the cutting tool shank with deviations within mm;

II – CE2 for OC1 – of one size – cutting tool; with deviations within hundreds μм;

III – CE3 for OC1 – for a nominal diameter of the cutting tool or rod, with deviations in the range of tenths of a millimeter up to one mm;

Corresponding Author: Zh.A. Hamuyela Gerra, University, of Department, Faculty, Box.3030. City. Country

IV – CE4 for OC2 of one or two nominal diameters;
V – CE5 for OC3 of two to three nominal diameters;
VI – CE6 for OC4 of three to five nominal diameters;
VII – CE7 для OC5 the five nominal diameters up to half or full operating range of the machine;
VIII – CE8 for OC6 from half to a full-range of the machine, and even with the stock.

The increase of the range of the clamping diameter Δd affects the trends in CE changes in different structures (fig.2).

Radial throbs Δp increase (fig.2, a). The static gain K_F as the ratio of output clamping force T to the input terminal S (fig.2, b), increases with the introduction of the transfer-amplifying units (wedge, lever) or self-tuning elements and decreases with multiple transfer-amplifying units for the increase of the stroke of the last link (animation), which increases the friction loss. With the principle changing of the action (the use of physical or other effect) the gain increases significantly (curve 1, fig. 2, c), or approaches to one (dashed curve 2, fig. 2, c). Retention factor clamping force $K T\omega = \frac{T\omega}{T}$ (where Tω – dynamic radial clamping force when rotating CE with the influence of centrifugal forces unbalanced Cl.E) decreases (curve 1, fig.2, c) and, moreover, essentially at the break between Cl.E (dashed curve 2, fig. 2, c).

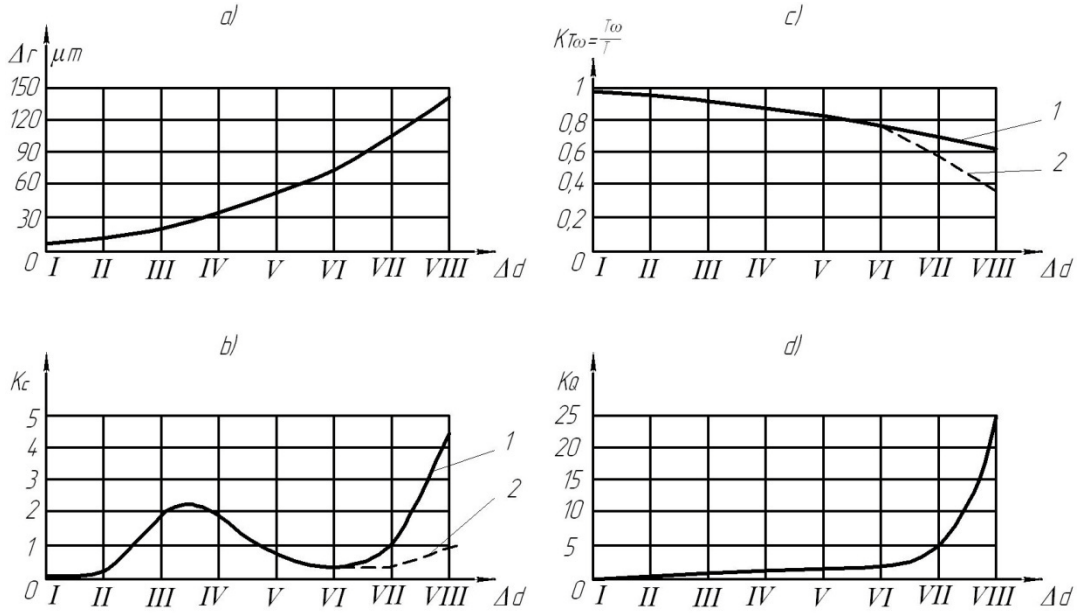

Fig. 2: Trends in the characteristics of different structures chucks I…VIII increase in the range of diameters clamped Δd: *a* - accuracy of the radial run out; *b* - static coefficient of magnification; *c* - indicator of the fall clamping force T at rotation to Tω; *d* - the quality factor for a wide-range

The quality factor of CE for a wide-bandness K_{WR} first increases monotonically and then rapidly (fig.4, d) and is equal to:

$K_{WR} = \frac{\Delta T}{T} \cdot \frac{\Delta d}{D_{max}} = \delta_T \cdot \delta_d$,

where ΔT – scatter radial clamping force when you reject clamping diameters;

$\Delta d = D_{max} - D_{min;}$

T – the average value of the radial clamping force;

D_{max} – maximum diameter of the clamp OC, provided along with the machine passport;

$\delta_T = \frac{\Delta T}{T}$ – factor of uneven clamping force;

$\delta_d = \frac{\Delta d}{D_{max}}$ – coverage rate.

Group I: (fig.1) there can be referred the high-precision CE tools (company *Schunk GmbH*) with press-in force of *TRIBOS* to work with speeds up to 110 n 000 r / min, the bulb companies such as *Haimer GmbH* with the 'Safelosk', *Marquart* shank HSK-63A systems etc (Kuznetsov, Y.N., *et al*., 2010; Kuznetsov, Y.N., *et al*., 2012; Leopold, I., G. Schmidt, 2001).

Group II: (fig.1) includes precision hydromechanical CE tools type *CoroGrip* by the firm *Sandvic Coromant* to a hydraulic pump that provides clamping pressure up to *70 MPa* and *100 MPa* unclamping

(Kuznetsov, Y.N., *et al*., 2010; Kuznetsov, Y.N., *et al*., 2012; Danz, G., 1998; Leopold, I., G. Schmidt, 2001) In CE of the I and II groups the radial runout does not exceed *2-6 мм*, and clamp shanks of different diameters to decrease is achieved by the use of transitional cylindrical collet sleeves.

Group III: (fig.1) includes collet CE of a single and double clamping tool and calibrated rods. Switching to a different diameter clamping may be changing with the basic grips change, which is fixed in the axial direction of the intermediate cylindrical collets, bushings, attached to the lips of the main working collet (Kuznetsov, Y.N., *et al*., 2010; Kuznetsov, Y.N., *et al*., 2012). The Changing of the basic collets can be automatic in terms of flexible manufacturing (Kuznetsov, Y.N., *et al*., 2010; Kuznetsov, Y.N., 2000; Danz, G., 1998; Leopold, I., G. Schmidt, 2001).

Group IV: (fig.1) contains self-adjusting spring-loaded push-CE (Kuznetsov, Y.N., *et al*., Kuznetsov Y.N., *et al*, 1988), with intermediate Cl.E, automatically selecting the gap between them and the rod when it is served. These cartridges work reliably when calibrated workpieces and hot rods work statically. Coverage range Δd is provided with the help of the main course of the collet *Xo* and self-*Xs*:

$$\Delta d=2(Xo \cdot tg\alpha + Xs \cdot tg\beta),$$

Where;

α – half cone angle of the main collet;

β – wedge angle of intermediate Cl.E, no greater than the angle of friction (up to $4\ldots5^0$).

Switching to a different range of clamping diameters can be replaceable cartridges, intermediate Cl.E (maple cams, collets bracelets).

Group V: (fig.1) includes wide-band collet CE with single animation (m=1) due to the formation of tangential wedges by cutting additional sphenoid Cl.E (Kuznetsov, Y.N., *et al*., 2011; Kuznetsov Y.N., *et al*, 1988), providing the range

$$\Delta d_1=\frac{2X_0}{\cos\pi/_z}\cdot tg\alpha,$$

Where; *Z* – number of tangential sections (at least 3);

α – half cone angle of the main collet.

Switching to a different range of diameters clip is replaceable cartridges or inserts that attach to the additional sponges.

Group VI (fig.1) includes wide-band collet CE with double animation *(m=2)* by introducing into the interior of the main chuck with single animation intermediate cylindrical collets tangential cutting, forming the second group of sphenoid Cl.E and second animation speed, and therefore the range:

$$\Delta d_2=\frac{\Delta d1}{\cos\pi/_z}=\frac{2X_0}{(\cos\pi/_z)^2}.$$

Switching to a different range of diameters is done by changing of the clamp intermediate cylindrical collet or inserts, attached to its/their sphenoid Cl.E.

Further increase of the range is possible through triple multiplier, but it leads to the increase in diametrical size of CE and decreases its gain.

If the number of animations m diameter range clips will be:

$$\Delta d_m=\frac{2X_0}{(\cos\pi/_z)^m}.$$

At $z = 3$ the increase of the range with the number of animations is a geometric progression:

$$\Delta d=\frac{2X_0}{\cos\pi/_3}=4X_0;\ \Delta d_2=8X_0;\ \Delta d_3=16X_0 \text{ etc.}$$

Results And New Constructions:

This leads to the idea of switching to a different principle, using the clamp loose and fluids (VIII CE group).

Group VII (fig.1) is developed in NTUU "KPI" where wedge-wideband CE with two gear-reinforcing links for bars were developed (fig.3) and quickset CE with positioned multidisciplinary cams (fig.4,5).

Wedge – wideband CE (fig. 3) comprises a body 3 with angled holes that contain plungers 2 with the possibility of the axial movement and the associated wedge clamping jaws 6, the drive movement of the plungers (not shown) is associated with the stem 1. Between the plungers 2 and radially movable clamping jaws 6 there are posted rigidly connected ones with two plungers (or at the same time made along with them) split keys 4, with T-shaped surfaces 8 under the slots 5 in wedge clamping jaws 6, in contact with the rod 7, providing the angles of the plungers 2 (α) and T-slots cams 6 (β) are opposite in direction.

Wedge – wideband CE works like this, when the plunger rod 1 is moved to the left of the plungers (the moving of the plungers simultaneously in axial and radial directions), V-cams 6 move along the body guiding 3 up to the cartridge axis with the help of connected blocks with inclined slots (grooves) 4 to the plungers 2.

Clamp bar is 7. Spreader bar appears when you move the rod 1 to the right. The pattern of cartridge units movement is shown in Fig.3, b, where we have Xo – axis actuator stroke of clamping; $Y_П$ – radial movement of the plunger; YK – component of the radial movement of V-cams 6 clip from T-surfaces; Y – general movement of the chuck jaws radially, equal to:

$Y = Y_{П} + Y_K$.

The arrows indicate the direction of the movement of the cartridge units. From the scheme it follows that:

$Y_{П} = X_o \cdot tg\alpha;$ $Y_K = X_o \cdot tg\beta.$

Then $Y = Xo \cdot (tg\alpha + tg\beta)$,

Where; α – angle to the axis of the cartridge plungers; β – angle of the T-shaped surfaces to the axis of the cartridge.

Quickset CE of the plunger type with multi-Cl.E as an irregular polygonal pyramid (fig.4) (Kuznetsov, Y.N., *et al*., 2010) includes a body 1, in which the chuck jaw 2 with plungers 3 are obliquely located, Drive moving cams, connected to the rod 4. The clamping jaws 2 with plungers 3 fitted with cannelures 5 for the interaction with the rod 4 are made revolving about their axis with respect to the angle fixation 6 and the cam 7.

The clamping jaws are exercised in the shape of an irregular polygonal truncated pyramid, which is a set of eight facets 8 of different types and heights. The clamping jaws 2 with plungers 3 are interchangeable. Facets profile 8 of the pyramid is made in accordance with the profile of fixed blocks 9. From one side of the plungers 3 bearings 10 are installed.

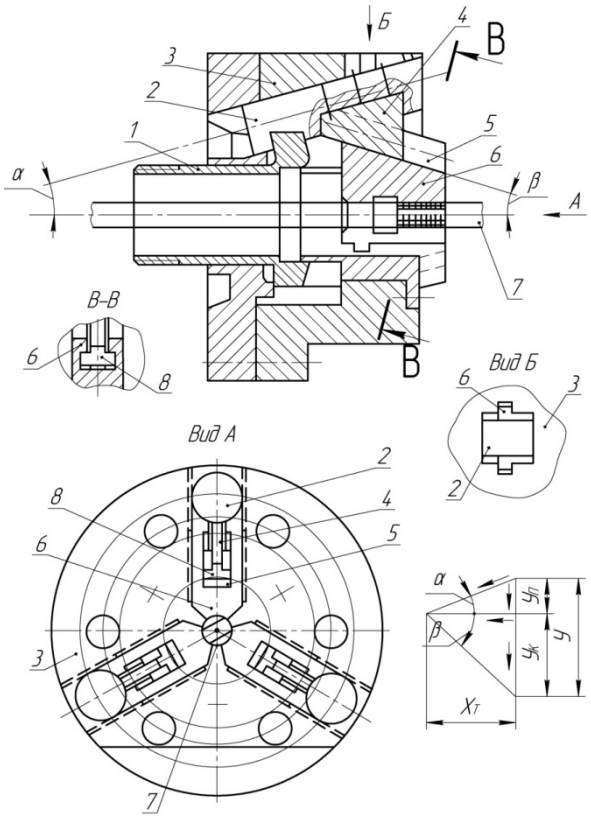

Fig. 3: Wedge – wideband clamping chuck

Quickset CE is as follows. Knowing the diameter (size) of the workpiece 9, the cartridge is adjusted to the size of the clamp by rotating cams 7 and the output latches 6 from the fixing plunger groove 3. With the rotation of the chuck jaws 2 with plungers 3 around their axes the required edge 8 are adjusted at the clip position. With the cam 7 rotating clamp 6 is injected which fixes the slot of the plungers 3. Rod 4 is to the right. When moving the rod 4 with the help of the moving plungers 3 gear to the left, the workpiece clamping 9 takes place. After the end of the workpiece processing while moving the rod 4 to the right of the moving the release of the workpiece 9 is conducted. The cartridge allows to fix rods and piece blanks. For the further expansion of the range of assigned pieces the clamping jaws 2 with the plungers 3 are replaced. To do this, while the rod 4 is at the far right of the fixing groove 3 the latch plunger 6 is derived, then the removal and installation of the new chins 2 with plungers 3 are made. Setting of the bearing box 10 to one side of the plunger 3 allows reducing the energy needed while turning the cluck jaws 2 with the plungers 3.

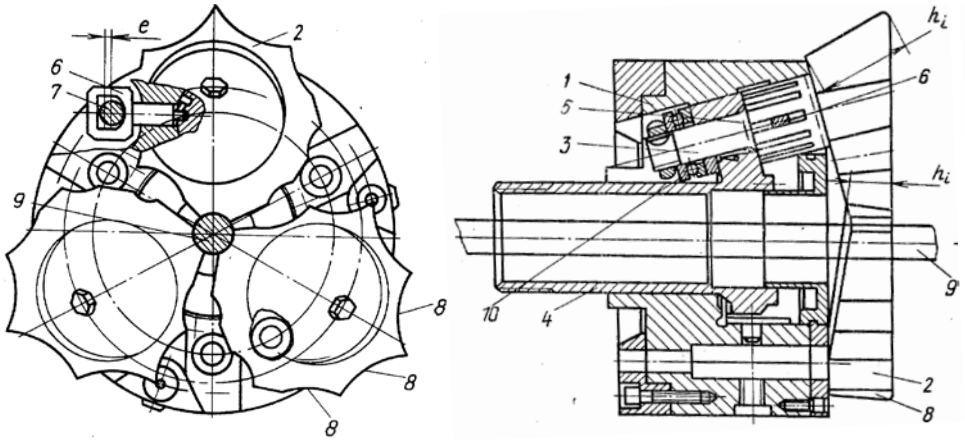

Fig. 4: Quickset clamping chuck of the plunger type with multi – CL.E as irregular polygonal pyramid

Quickset CE of the plunger type with simultaneous positioning of multi-Cl.E manually or automatically (fig.5) (Kuznetsov, Y.N., *et al*., 2010) includes the body 1 with angled sprouts, where removable clamping jaws 2 with shanks 3, drive rotation shunk associated with rod 4 with the possibility of axial movement are located. In body 1 location there are self-locking gear, the output link of which is the screw gear and the input link is the screw 6 is, mounted for rotation in the body 1 and is connected to the control system changes of the angular position (rotation) of the chuck jaws 2, (designed to fasten the workpieces 7). Mounted at the shanks 3 there are bevel gears 8, interacting with the central bevel gear 9, mounted on the rotation of the drive rod 4 liners.

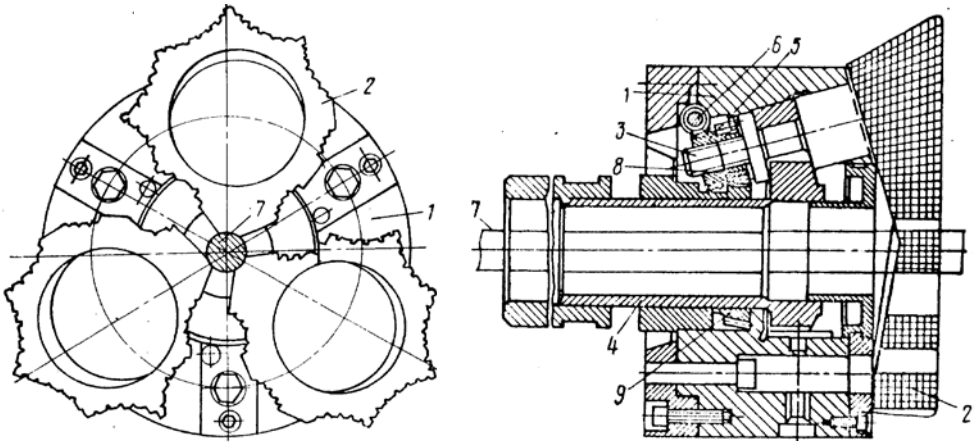

Fig. 5: Quickset clamping chuck of the plunger type with simultaneous positioning of multi – CL.E manually or automatically

Quickset CE works as follows. The setting the cartridge to the desired size of the workpiece clamping 7 is a fixed stop spindle input which is possible when the input screw 6 interacts with the cams 2 angle position changing control system (the cams fix the workpiece 7). When the screw 6 rotates to a certain angle the screw wheel 5 originates and then the turning of the shank 3 originates through a movable splined connection between shank 3 and the screw wheel 5. Therefore, a simultaneous rotation of all shanks 3 with clamping jaws 2 is done through the central bevel gear 9, fixed at the rod 4 of the drive movement shanks and also through the bevel gears 8. When the rod is moved to the left, the radial and axial movement of the shanks 3 along with the clamping jaws 2 comes about, and consequently, of the clamping of the workpiece 7. Unclamping of the workpiece 7 is done when you move the rod 4 to the right from the clamp drive.

Conclusion:

To extend the range of the CE work it is necessary (Kuznetsov, Y.N., *et al*., 2010; Kuznetsov, Y.N., *et al*., 2011): ● to transmit from solid hard Cl.E by increasing flexibility of the elastic ties between separate Cl.E to break-ups of these bonds; ● to inject fluid and granular media, except for the solid ones; ● to change the clamp principles even having a single scheme of power (energy) flow and free-flowing environment, change the principles clip even a scheme of power (energy) flow; ● to replace the continuous scheme coverage for the solid media with the discrete or discrete-continuous one.

REFERENCE

Danz, G., 1998. Automatische Spindle-Auswucht system rationalisieren die HSC-Bearbeitung // Maschinenmarkt., 48: 26-32.

Kuznetsov, Y.N., 2000. Ibrahem Farhan Salman Al-Refo. Accuracy of installation in collet. –NTU "KPI" Bulletin. – Mechanical Engineering. - № 37: 85-96.

Kuznetsov, Y.N., V. Voloshin, V.N., Nedelcheva, P.M., El-Dahab F.V. Clamp, 2010. mechanism for high-speed and high-precision machining: Monograph / Ed. Kuznetsov, Y.N. – Gabrovo: *Vasil Aprilov* University Press, pp: 724.

Kuznetsov, Y.N., V.G. Kushik, O.Y. Yurchishin, 2011. Wideband and multi-clamping mechanisms: theory and practice: Monograph / Ed. Kuznetsov, Y.N. - K.: OOO "ZMOK" - OOO "GNOSIS", pp: 424.

Kuznetsov, Y.N., V.G. Kushik, V.B. Firanskiy, O.A. Gumeniuk, 2012. Tool chucks: Monograph / Ed. Kuznetsov, Y.N. - K.: OOO "GNOSIS", pp: 286.

Kuznetsov, Y.N., Zh.A. Hamuyela, Gerra, T.O. Hamuyela, 2012. Morphological synthesis of machines and mechanisms: Monograph / Ed. Kuznetsov, Y.N. - K.: OOO "GNOSIS", pp: 416.

Leopold, I., G. Schmidt, 2001. Bewertung von HSC – Spannfuttern // Werkstatts – technik., 9(91): 556-564.

Self-adjusting clamp mechanisms: Reference book / Kuznetsov Y.N., A.A. Vachev, S.P. Syarov, A.J. Tsrvenkov, Y.N. Ed. Kuznetsov, K. Teznika, 1988. Sofia. State Publishing House "Техника", pp: 221.